10.00mm(.400") Wire To Wire And Wire To Board Connector

HRB®
Connector & Terminal

Shenzhen Hongru Connector Co., Ltd

Email:yukyli@hrb-connector.com
Tel: 86-0755 2709 6669
Fax: 86-0755 2709 2392
Skype: haiyuncheng-vivian
Mobile(whatsapp): 86-186 8112 3590
Website: http://www.hrb-connector.com

SPECIFICATIONS:

- Current Rating:AWG#8:48A AC,DC AWG#10:40A AC,DC AWG#12: 32A AC,DC AWG#14: 25A AC,DC AWG#16: 20A AC,DC
- Voltage Rating:600V AC,DC
- Contact Resistance:20mΩ max.
- Withstanding Voltage:1000V AC/minute
- Part NO:T9910PS-2
- Part NO:T9910PS-00(Gold Plated)
- Part NO:T9910PS-15U(15U Gold Plated)
- Part NO:T9910PS-30U(30U Gold Plated)
- Function Of Local Gold-plated
- Material: Copper Alloy
- Wire Size:AWG#8~#16
- Use With:P9910-N
- GWT:750℃ IEC-60335-1

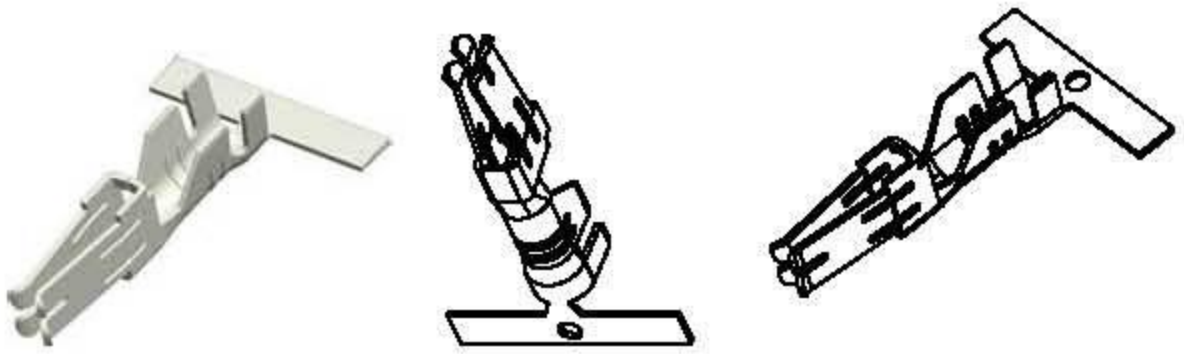

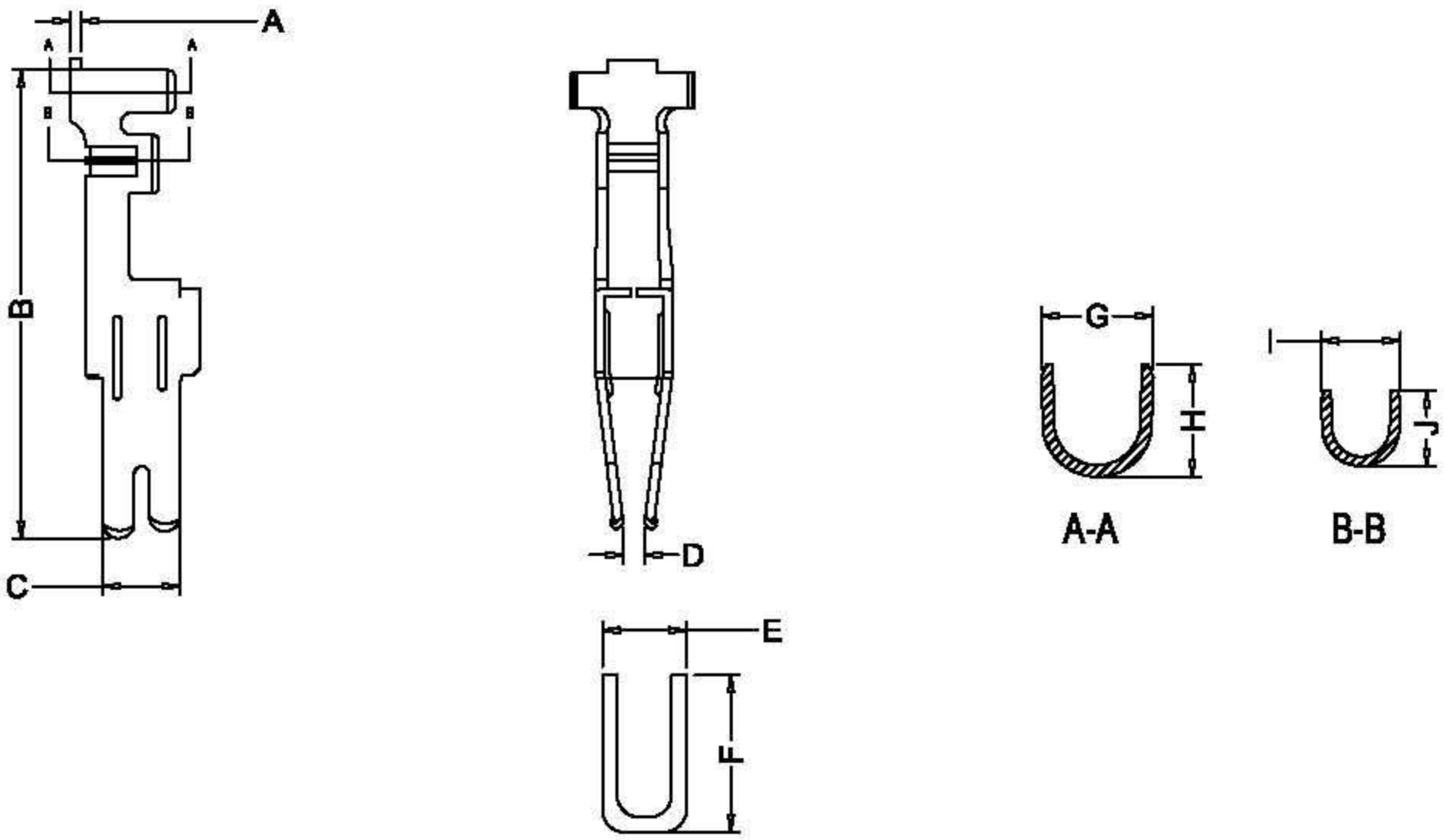

Ordering Information And Dimensions

Part NO.	A	B	C	D	E	F	G	H	I	J	Applicable Wire	Q'ty
T9910PS-2	0.50	27.60	4.80	1.00	3.80	7.10	5.94	5.69	3.80	3.92	AWG#14~#16	1500PCS
T9910PS-2A	0.50	27.60	4.80	1.00	3.80	7.10	5.90	6.60	5.40	6.10	AWG#8~#12	1500PCS

PART CODE INFORMATION

XXXXX XX - X
I II III

I-T9910 Denoting series designation.
II-PS denoting Copper Alloy of body
III-2 or 2A,Denoting different of body construction

ISO 9001 UKAS

E304945 E322751

SGS

http://www.hrb-ks.com